FOR-1351 Rev.1.0

| Contacts, Gold-plated<br>Type of products | (ØA) | Wire gauge (mm²) | Wire gauge (AWG) | Recommended stripping length |
|---|---|---|---|---|
| ◆ 16A-GF-0.37 | 0.9 | 0.14-0.37 | 26-22 | 7.5mm |
| 16A-GF-0.5 | 1.1 | 0.50 | 20 | 7.5mm |
| 16A-GF-0.75 | 1.3 | 0.75 | 18 | 7.5mm |
| 16A-GF-1.0 | 1.45 | 1.00 | 18 | 7.5mm |
| 16A-GF-1.5 | 1.75 | 1.50 | 16 | 7.5mm |
| 16A-GF-2.5 | 2.25 | 2.50 | 14 | 7.5mm |
| 16A-GF-4.0 | 2.85 | 4.00 | 12 | 7.5mm |

| REVISION RECORD | | | | |
|---|---|---|---|---|
| REV | ECN | DESCRIPTION | DRFT | DATE |
| | | | | |

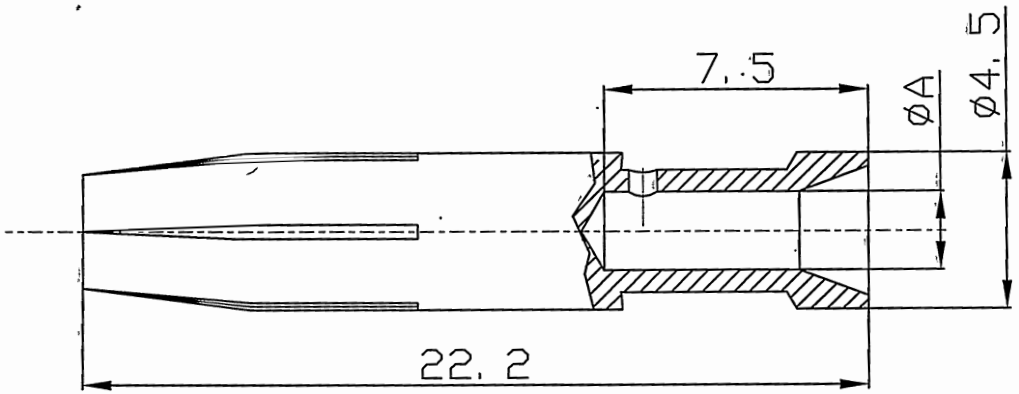


Crimp contacts
01. Material :Copper alloy
02. Surface :Gold-plated
03. Contact resistance :≤1mΩ
04. Terminal :Crimp connection
05. Wire gauge :0.37-4.0mm² (AWG 22-12)
06. Rohs Compliance

| | | | |
|---|---|---|---|
| DETACHED LISTS | PART NO.: / | DEGSON® 宁波高松电子有限公司 NINGBO DEGSON ELECTRICAL CO., LTD | |
| | APPD: HJS 2016.6.10 | NAME: 16A-Female Contacts(Gold-plated) | |
| | CHKD: CHN 2016.6.10 | | |
| | DRFT: Mr.Yang 2016.06.06 | TITLE: CUSTOMER DRAWING | REV: D0 |
| | THIRD ANGLE PROJECTION | DRAWING NO.: / | SHEET: 1/1 |
| | | MM (INCH) DO NOT SCALE DRAWING | SCALE: 5:1 |